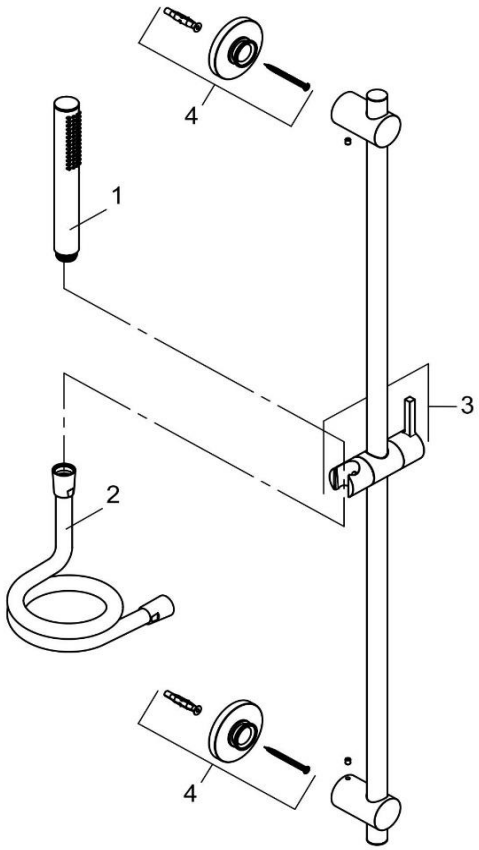

2084039-15		Brause- Set	shower set
1	3912039-00	HANDBRAUSE	HANDSHOWER
2	6107239-00	BRAUSESCHLAUCH	SHOWER HOSE
3	7381239-00	GLEITSCHIEBER	GILDER
4	7381339-00	ROSETTE	ESCUTCHEON