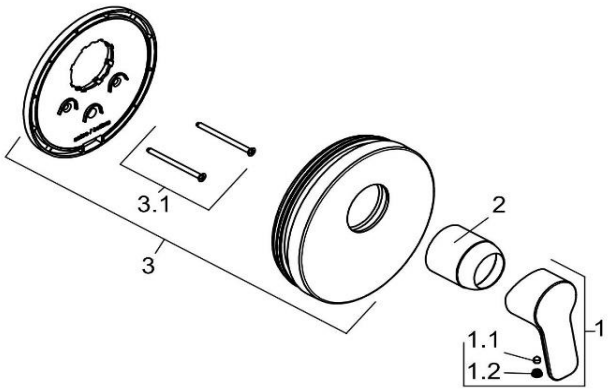

374200565		Unterputz-Brause-Einhandmischer	concealed single lever shower mixer
1	7361605-00	HEBEL PURE & EASY	LEVER PURE & EASY
1.1	92204601-00	GEWINDESTIFT	GRUB SCREW
1.2	93019759-00	STOPFEN	PLUG
2	92215405-00	ABDECKHÜLSE	COVER SLEEVE
3	7364005-00	UP - ROSETTE	ESCUTCHEON, CONCEALED
3.1	7424200-00	SCHRAUBEN SET	SCREW SET